ERSATZTEILLISTE
OKIFAX OF-8

SPARE PARTS LIST
OKIFAX OF-8

M-OSD-10050-10

ÜBERBLICK (OVERVIEW)

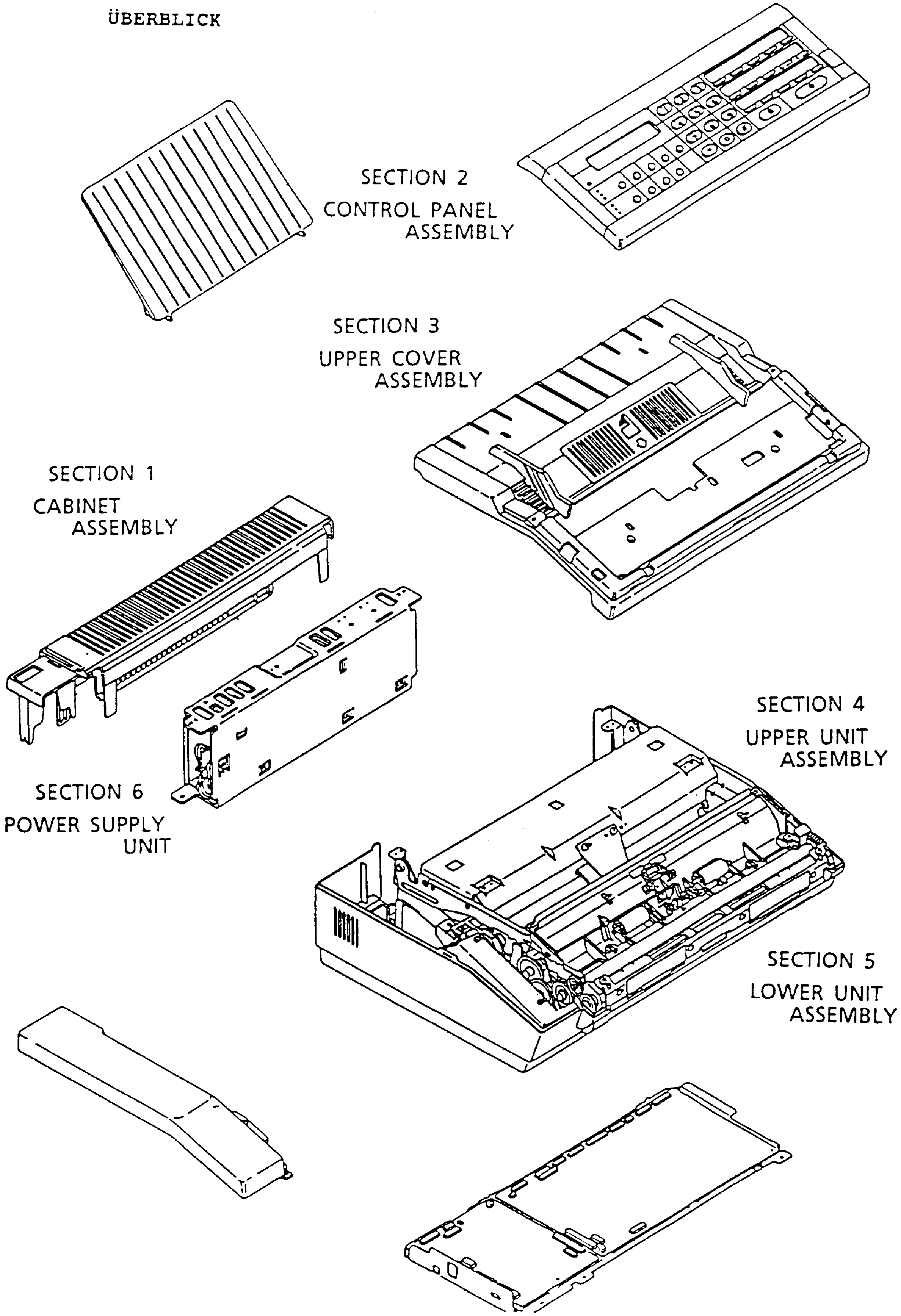

ZEICHNUNG 1 - CABINET ASSY (FIGURE 1 - CABINET ASSY)

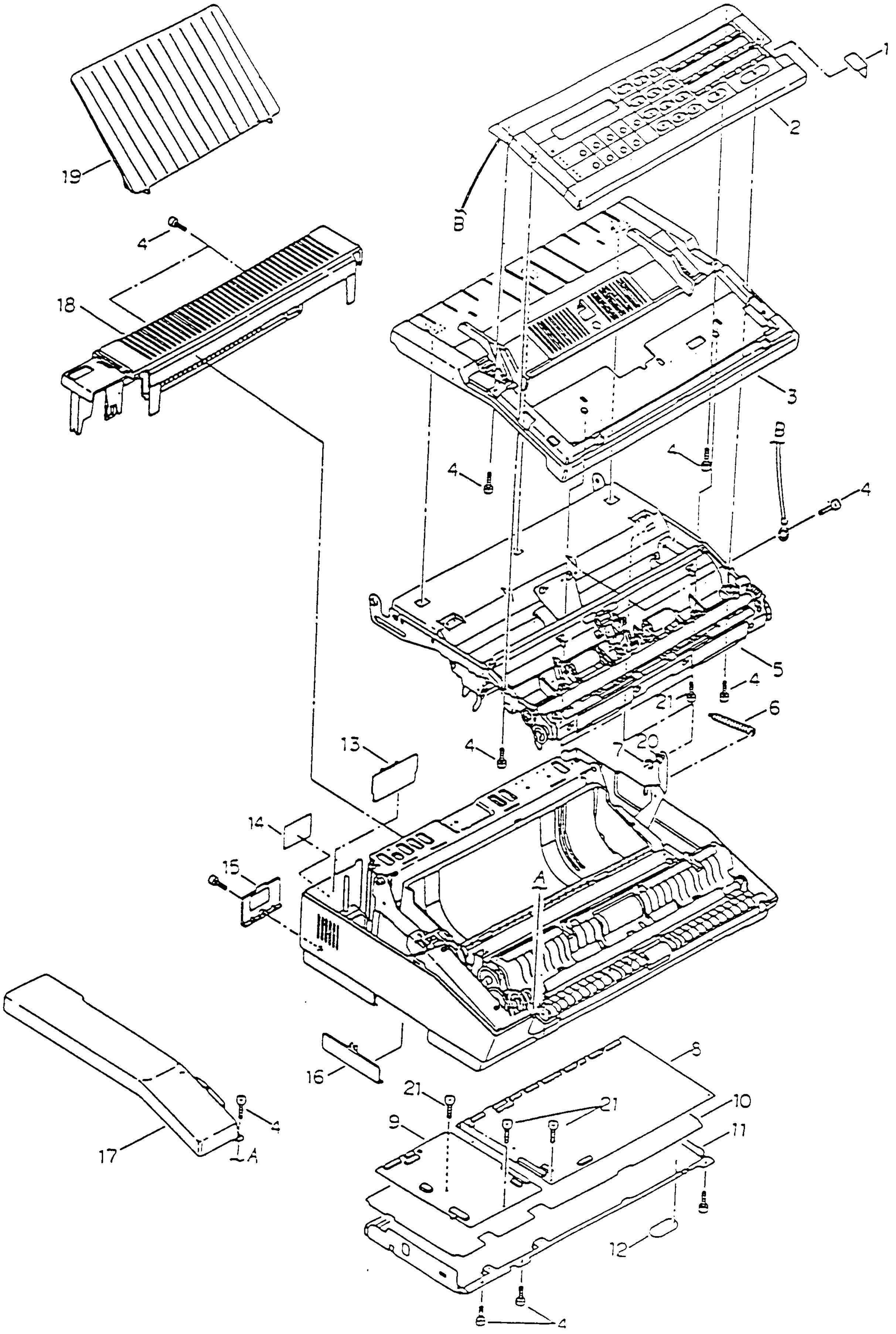

LISTE 1 - CABINET ASSY (TABLE 1 - CABINET ASSY)

NR. **NO.**	**BEZEICHNUNG** **PART NAME**	**BESTELL-NR.** **PART NO**
1	LATCH BUTTON	3PP3522-3559P4
2	CONTROL PANEL ASSY	4YB3522-1222G12
3	UPPER COVER ASSY (SIEHE SEITE 8+9)	1PA3522-3632G2
4	TAPPING SCREW	+BTD3-8-IOF
5	UPPER UNIT ASSEMBLY	1PA3522-3590G11
6	ARM SPRING	4PP3522-3491P1
7	E-RING	RE4-SUS
8	P.W.A. MCNT-15B - INT'L	4YU3522-1192G16
9	P.W.A. NCU-15I INT'L	4YU3522-1193G4
10	INSULATOR	3PP3522-3640P1
11	BASE PLATE	2PP3522-3519P1
12	INSPECTION LABEL	4PP3522-3273P1
13	P.W.A. LINE-15 - INT'L,HOL	4YU3522-1196G6
14	SERIAL NUMBER PLATE	3PP3512-3327P131
15	TERMINAL COVER	3PP3522-3545P24
16	LOWER SIDE COVER	4PP3522-3528P4
17	CRADLE COVER	1PP3522-3567P4
18	REAR COVER	1PP3522-3561P4
19	SUB TRAY	2PP3522-3562P1
20	POLYESTER WASHER	STW-FT60 (t=1mm)
21	TAPPING SCREW	BTP(WH)3-8-F

ZEICHNUNG 2 - CONTROL PANEL ASSY (FIGURE 2 - CONTROL PANEL ASSY)

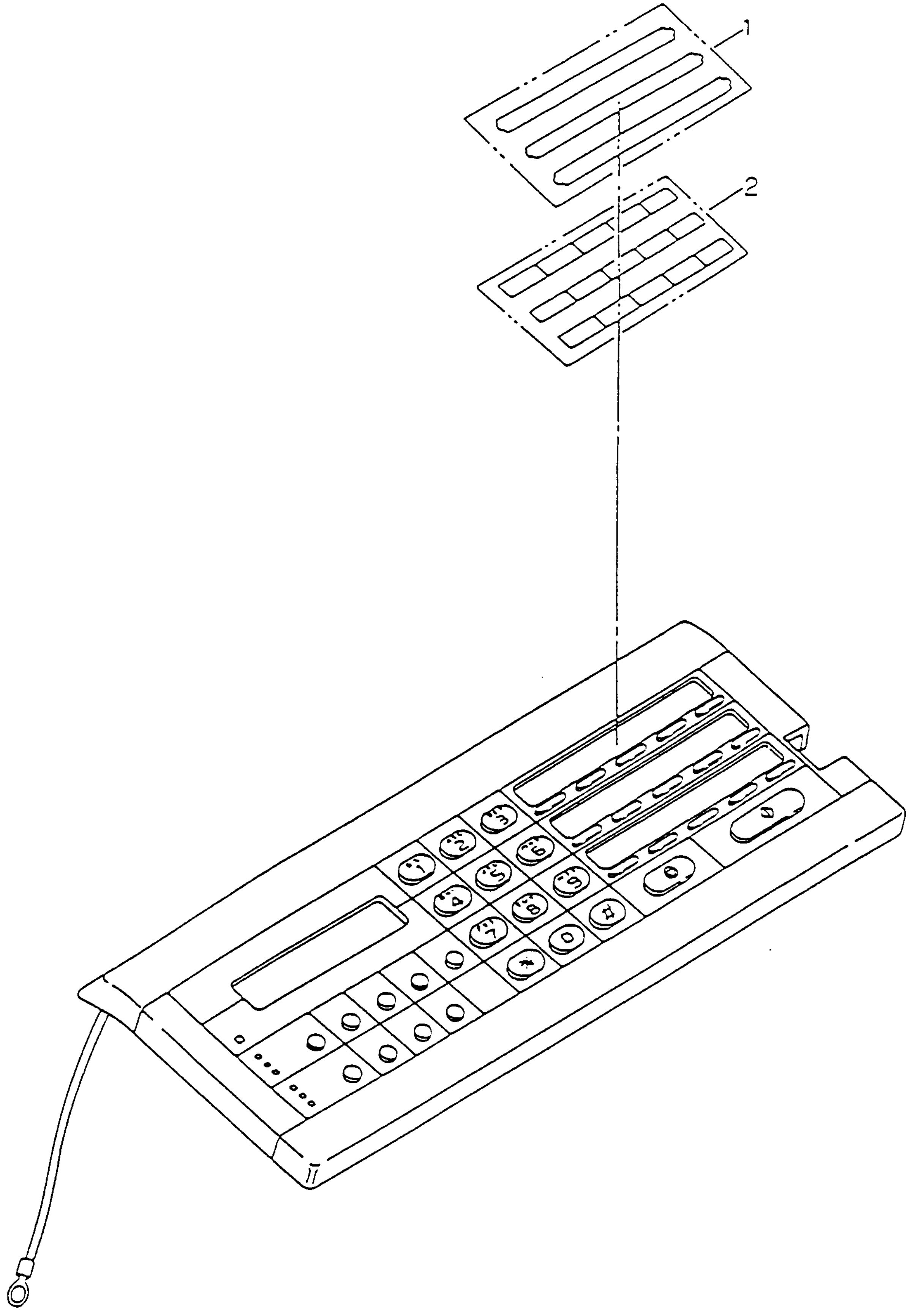

LISTE 2 - CONTROL PANEL ASSY (TABLE 2 - CONTROL PANEL ASSY)

NR. NO.	BEZEICHNUNG PART NAME	BESTELL-NR. PART NO
1	ONE TOUCH COVER	4PP3522-3688P1
2	ONE TOUCH COVER	4PP3522-3689P2

ZEICHNUNG 3 - UPPER COVER ASSY (FIGURE 3 - UPPER COVER ASSY)

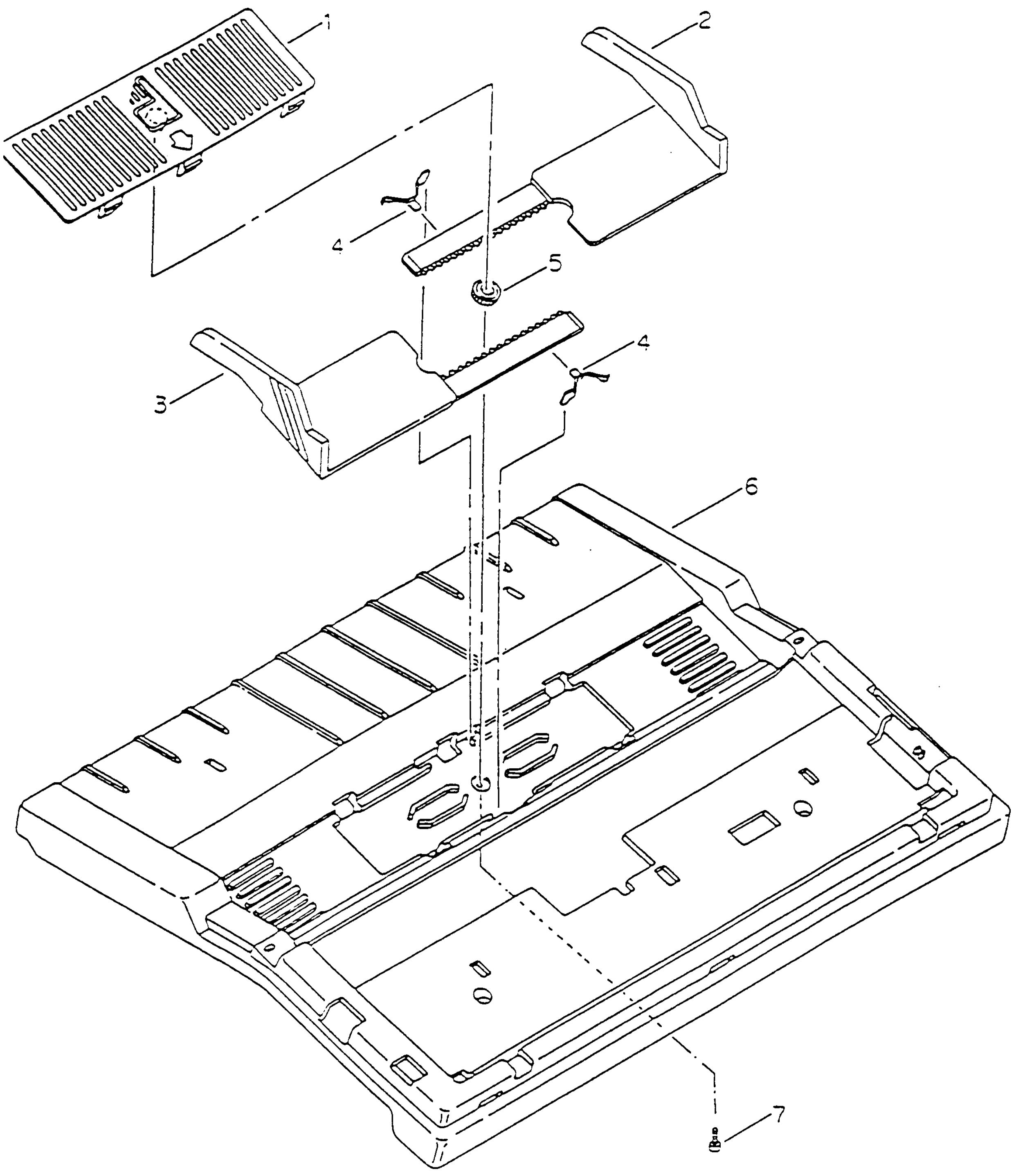

LISTE 3 - UPPER COVER ASSY (TABLE 3 - UPPER COVER ASSY)

NR. **NO.**	**BEZEICHNUNG** **PART NAME**	**BESTELL-NR.** **PART NO**
1	ALIGNER DOCUMENT COVER	3PP3522-3540P7
2	DOCUMENT ALIGNER (R)	2PP3522-3539P7
3	DOCUMENT ALIGNER (L)	2PP3522-3538P7
4	RACK SPRING	4PP3522-3501P2
5	GEAR PINION	4PP3522-3008P1
6	UPPER COVER	1PP3522-3560P14
7	TAPPING SCREW	+BTD3-8-IOF

ZEICHNUNG 4 - UPPER UNIT ASSY (FIGURE 4 - UPPER UNIT ASSY)

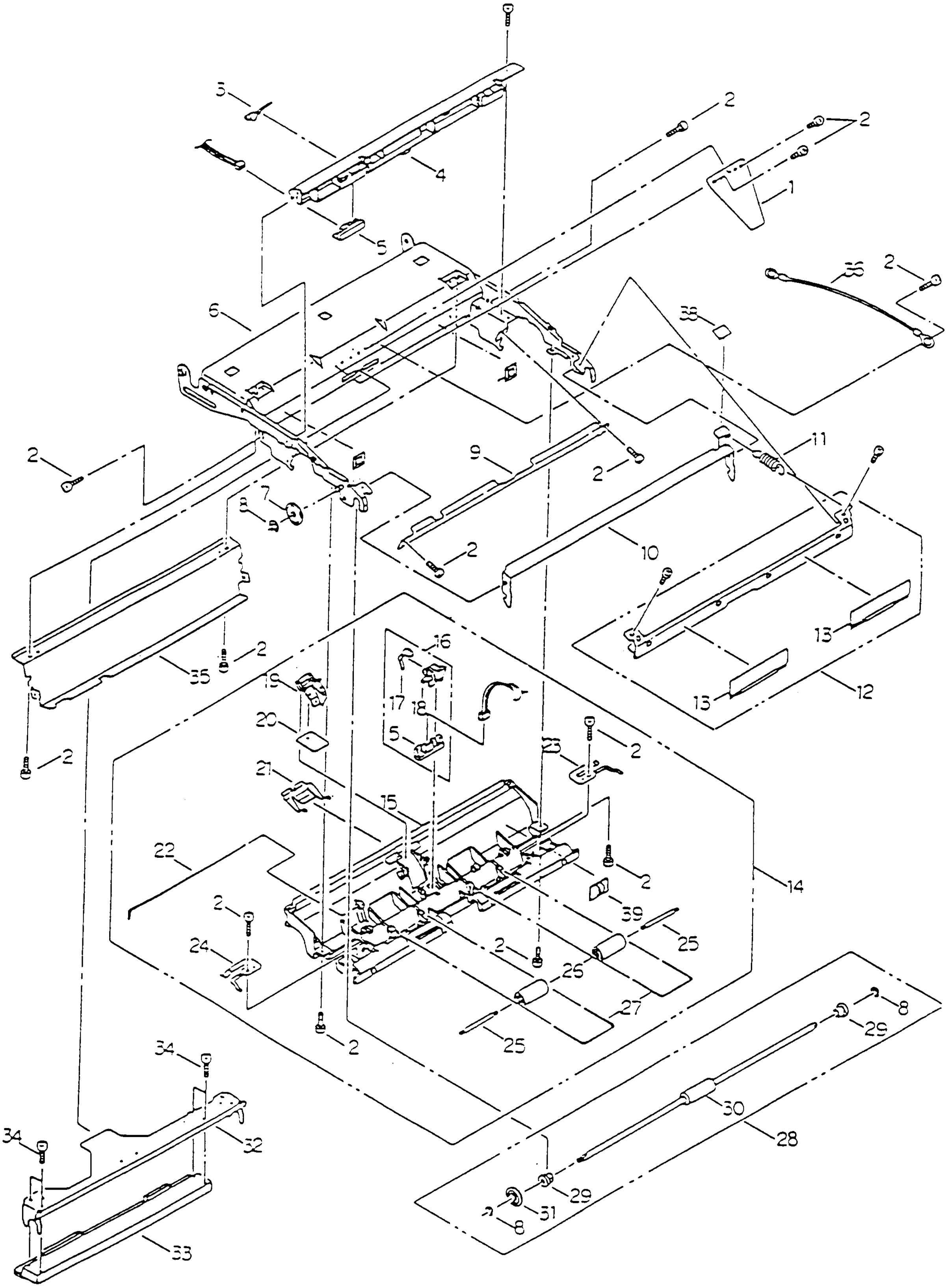

LISTE 4 - UPPER UNIT ASSY (TABLE 4 - UPPER UNIT ASSY)

NR. NO.	BEZEICHNUNG PART NAME	BESTELL-NR. PART NO
1	HEAD PLATE SPRING	4PP3522-3502P1
2	TAPPING SCREW	+BTD3-8-IOF
3	PC1 LEVER	4PP3522-3485P1
4	LEADER GUIDE	2PP3522-3546P1
5	PHOTO SENSOR	4YB3522-1236G1
6	UPPER FRAME	1PP3522-3520P1
7	GEAR (Z23)	4PP3522-3475P1
8	E-RING	RE4-SUS
9	HEAD STAY	3PA3522-3625G1
10	LATCH PLATE	3PP3522-3509P1
11	LATCH SPRING	4PP3522-3496P1
12	GUIDE BRACKET (ENTHÄLT NR. 13)	3PA3522-3594G1
13	EARTH BRUSH	4PP3522-3526P1
14	DOCUMENT GUIDE ASSY (ENTHÄLT NR. 2,5,15-27)	1PA3522-3592G1
15	DOCUMENT GUIDE (U)	1PP3522-3548P1
16	PHOTO SENSOR ASSY (ENTHÄLT NR. 5,17,18)	3PA3522-3577G1
17	PHOTO SENSOR LEVER	4PP3522-3486P1
18	PHOTO SENSOR BRACKET	3PP3522-3536P1
19	BRACKET	4PP3522-3488P1
20	SEPARATION RUBBER	4PP3522-3523P1
21	DOCUMENT GUIDE SPRING	4PP3522-3497P1
22	SEPARATION RUBBER SPRING	4PP3522-3494P1
23	SCAN ROLLER SPRING (R)	4PP3522-3499P1
24	SCAN ROLLER SPRING (L)	4PP3522-3498P1
25	PINCH ROLLER SHAFT	4PP3522-3459P1
26	PINCH ROLLER	4PP3522-3490P1
27	PINCH ROLLER SPRING	4PP3522-3495P1
28	FEED ROLLER ASSY (ENTHÄLT NR. 8,29,30,31)	3PA3522-3593G1
29	METAL BUSHING	4PP3522-3570P1
30	FEED ROLLER (2)	3PP3522-3454P1
31	FEED GEAR (Z23)	4PP3522-3476P1
32	HEAD BRACKET	3PP3522-3506P1
33	THERMAL PRINT HEAD	4YB3522-1240G2

NR. **NO.**	**BEZEICHNUNG** **PART NAME**	**BESTELL-NR.** **PART NO**	**BEMERKUNG** **REMARK**
34	SCREW	+P(SW+W)3-8-HHC	
35	DECURLER PLATE	2PP3522-3518P1	
36	EARTH CABLE	4PP3522-3675P1	
38	LATCH MYLAR	4PP3522-3697P1	
39	WIRE CLAMPER	123A1120P0002	

ZEICHNUNG 5 - LOWER UNIT ASSY (FIGURE 5 - LOWER UNIT ASSY)

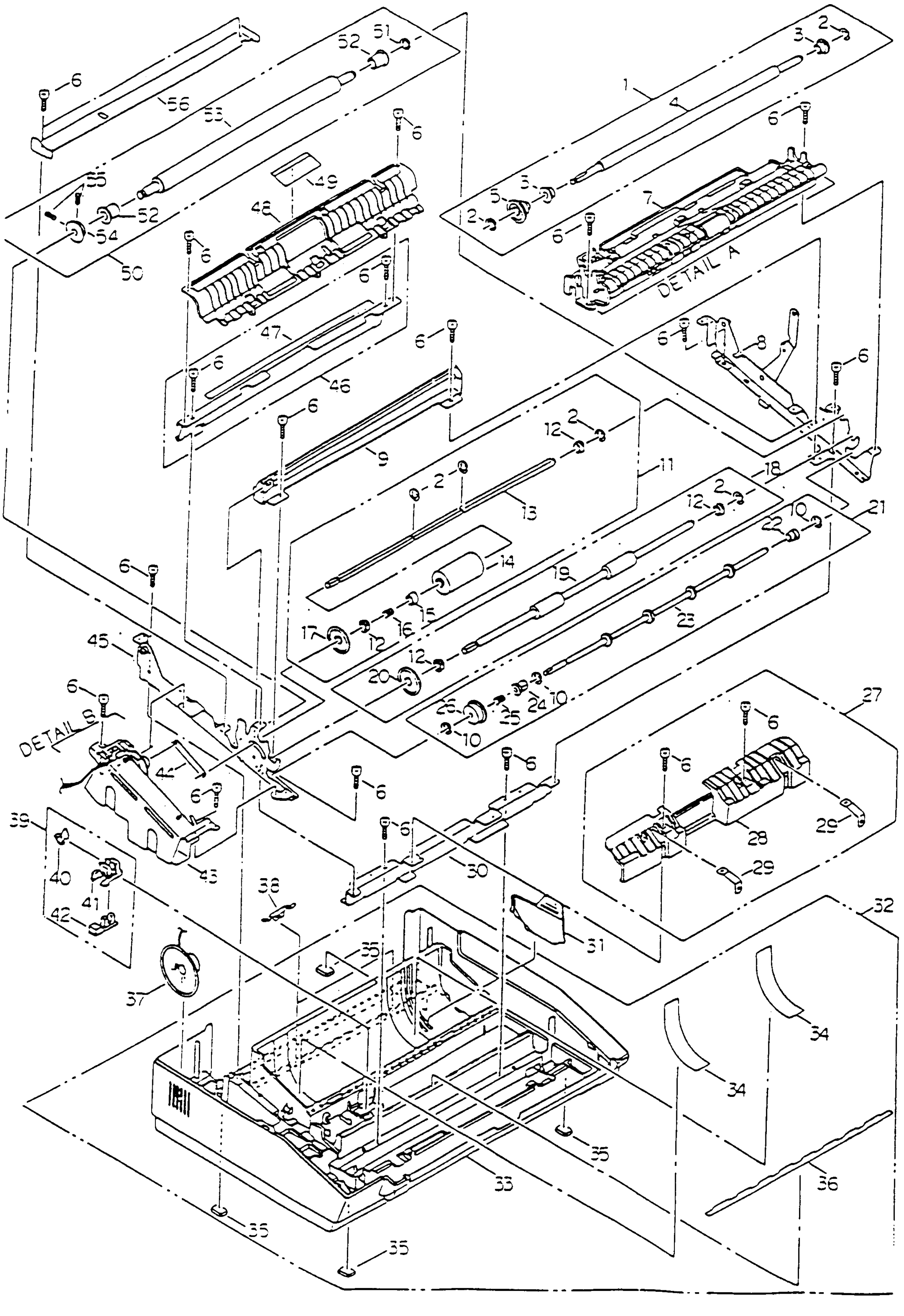

LISTE 5 - LOWER UNIT ASSY (TABLE 5 - LOWER UNIT ASSY)

NR. NO.	BEZEICHNUNG PART NAME	BESTELL-NR. PART NO
1	SCAN ROLLER ASSY (ENTHÄLT NR. 2,3,4,5)	3PA3522-3580G1
2	E-RING	RE6-SUS
3	METAL BUSHING	4PP3522-3601P1
4	SCAN ROLLER	3PP3522-3453P1
5	SCAN GEAR (Z28/20)	4PP3522-3474P1
6	TAPPING SCREW	+BTD3-8-IOF
7	PAPER GUIDE ASSY (U) (SIEHE SEITE 15+16)	1PA3522-3575G3
8	SIDE FRAME ASSY (R)	2PA3522-3682G1
9	CUTTER UNIT	4YB3522-1241G1
10	E-RING	RE4-SUS
11	ADF ROLLER ASSY (ENTHÄLT NR. 2, 12-17)	3PA3522-3581G1
12	BEARING	4PP3522-3568P1
13	ADF SHAFT	3PP3522-3451P1
14	ADF ROLLER	4PP3522-3457P1
15	ADF COLLAR	4PP3522-3489P1
16	ADF ROLLER SPRING	4PP3522-3493P1
17	ADF GEAR (Z35)	4PP3522-3472P1
18	FEED ROLLER ASSY (ENTHÄLT NR. 2,12,19,20)	3PA3522-3582G1
19	FEED ROLLER	3PP3522-3452P1
20	FEED GEAR (Z37)	4PP3522-3473P1
21	EXIT ROLLER ASSY (ENTHÄLT NR. 10, 22-26)	3PA3522-3584G1
22	METAL BUSHING	4PP3522-3565P2
23	EXIT ROLLER	3PP3522-3456P1
24	METAL BUSHING	4PP3522-3565P1
25	EXIT SPRING	4PP3522-3492P4
26	EXIT GEAR (Z42)	4PP3522-3479P1
27	PAPER GUIDE ASSY (ENTHÄLT NR. 28+29)	3PA3522-3585G1
28	PAPER GUIDE (E)	3PP3522-3535P1
29	EXIT PLATE SPRING	4PP3522-3504P1
30	LOWER FRAME BRACKET	3PP3522-3510P1
31	PAPER ROLL ALIGNER	4PP3522-3529P1

NR. NO.	BEZEICHNUNG PART NAME	BESTELL-NR. PART NO	BEMERKUNG REMARK
32	LOWER COVER ASSY (ENTHÄLT NR. 33-37)	1PA3522-3579G18	
33	LOWER COVER	1PP3522-3550P4	
34	SLIP SHEET	4PP3522-3525P1	
35	RUBBER FOOT	4PP3522-3524P1	
36	CUTTER MYLER	4PP3522-3563P1	
37	SPEAKER ASSY	4YS3522-1210G3	
38	EARTH SPRING	4PP3522-3483P1	
39	PHOTO SENSOR ASSY (ENTHÄLT NR. 40,41,42)	3PA3522-3596G1	
40	PHOTO SENSOR LEVER	4PP3522-3487P1	
41	PHOTO SENSOR BRACKET	3PP3522-3537P1	
42	PHOTO SENSOR	4YB3522-1224G1	
43	DRIVE GEAR ASSY (SIEHE SEITE 17+18)	1PA3522-3573G1	
44	CUTTER LINK	4PP3522-3484P1	
45	SIDE FRAME (L)	2PP3522-3515G1	
46	CUTTER GUIDE (ENTHÄLT NR. 47)	3PA3522-3624G1	
47	CUTTER LABEL	4PP3522-3617P1	
48	D-GUIDE (L)	2PP3522-3547P1	
49	ADF MYLER	4PP3522-3668P1	
50	PRINT ROLLER ASSY (ENTHÄLT NR. 51-55)	3PA3522-3583G2	
51	E-RING	RE7-SUS	
52	METAL BUSHING	4PP3522-3602P1	
53	PRINT ROLLER	4YB3522-1247P2	
54	PRINT GEAR (Z46)	4PP3522-3481P1	
55	SET SCREW	140A1090P0002	
56	RECORDING PAPER GUIDE	3PP3522-3512P2	

ZEICHNUNG 6 - DETAIL A: PAPER GUIDE ASSY (FIGURE 6 - DETAIL A: PAPER GUIDE ASSY)

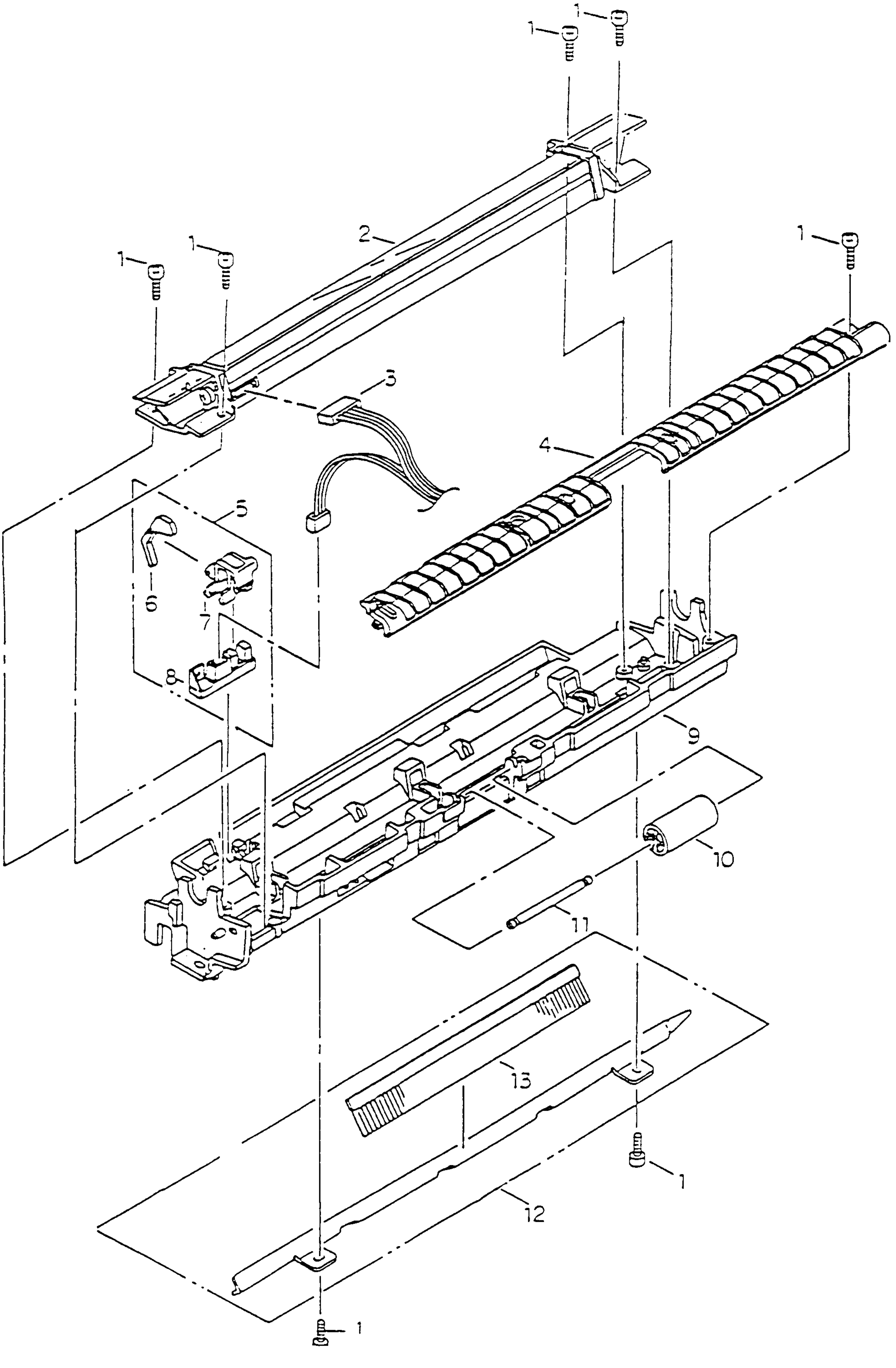

LISTE 6 - DETAIL A: PAPER GUIDE ASSY (TABLE 6 - DETAIL A: PAPER GUIDE ASSY)

NR. NO.	BEZEICHNUNG PART NAME	BESTELL-NR. PART NO
1	TAPPING SCREW	+BTD3-8-IOF
2	SCAN UNIT	3PA3522-3647G1
3	CABLE, SNS-MCNT	4YS3522-1209G3
4	D-GUIDE EXIT	3PP3522-3534P1
5	PHOTO SENSOR ASSY (ENTHÄLT NR. 6,7,8)	3PA3522-3577G1
6	PHOTO SENSOR LEVER	4PP3522-3486P1
7	PHOTO SENSOR BRACKET	3PP3522-3536P1
8	PHOTO SENSOR	4YB3522-1236G1
9	PAPER GUIDE (U)	1PP3522-3549P1
10	PINCH ROLLER	4PP3522-3490P1
11	PINCH ROLLER SHAFT	4PP3522-3459P1
12	EARTH BRACKET (ENTHÄLT NR. 13)	3PA3522-3648G1
13	EARTH BRUSH	4PP3522-3527P1

ZEICHNUNG 7 - DETAIL B: DRIVE ASSY (FIGURE 7 - DETAIL B: DRIVE ASSY)

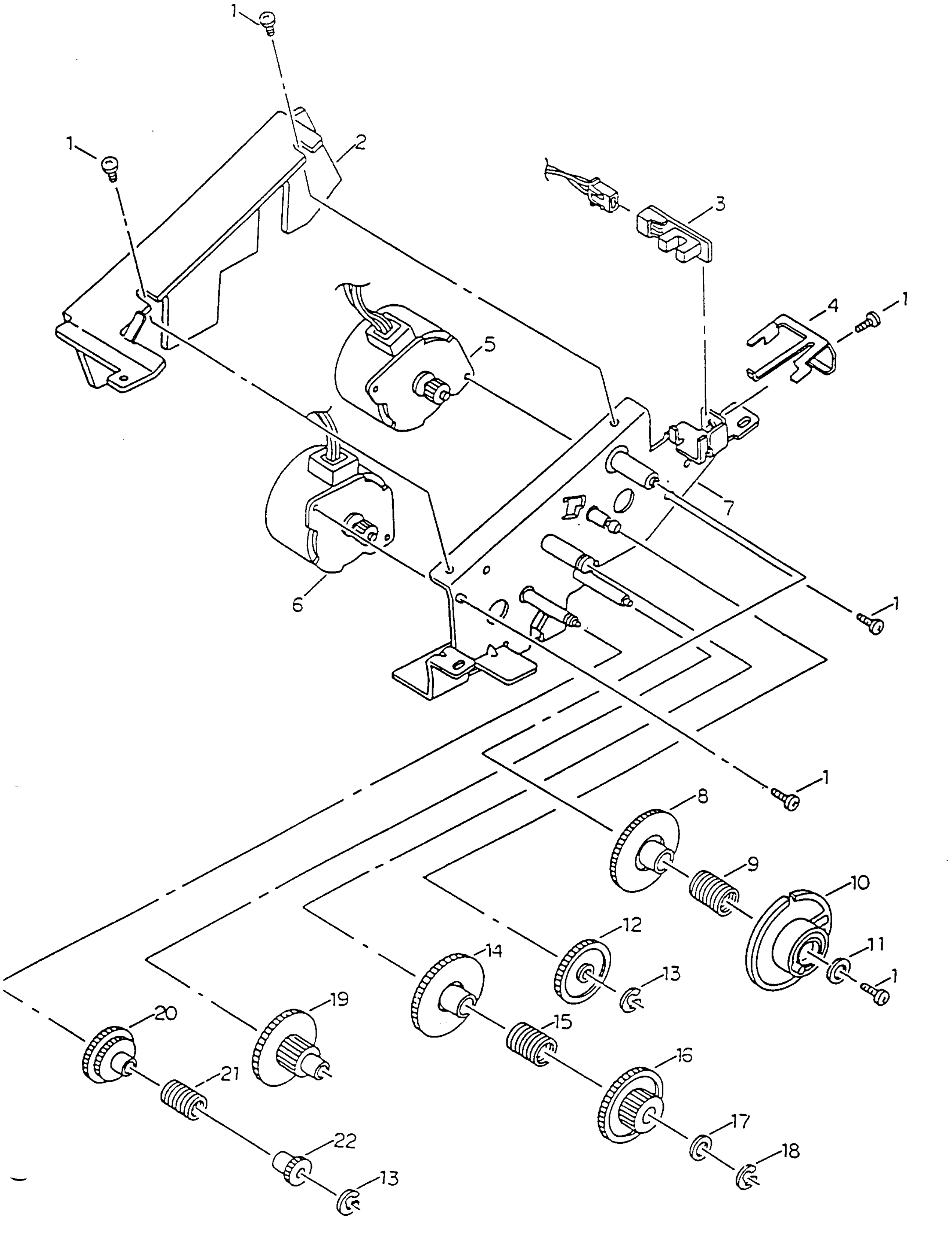

LISTE 7 - DETAIL B: DRIVE ASSY (TABEl 7 - DETAIL B: DRIVE ASSY)

NR. NO.	BEZEICHNUNG PART NAME	BESTELL-NR. PART NO
1	TAPPING SCREW	+BTD3-8-IOF
2	HEAT SINK PLATE	3PP3522-3514P1
3	PHOTO SENSOR	4YB3522-1224G1
4	PLATE SPRING	4PP3522-3500P1
5	SCAN MOTOR	4YB3522-1242G1
6	PRINT MOTOR	4YB3522-1242G2
7	GEAR FRAME	2PA3522-3574G1
8	CUTTER GEAR (Z64)	4PP3522-3469P1
9	CUTTER CLUTCH SPRING	4PP3522-3492P3
10	CUTTER PULLEY	4PP3522-3470P1
11	WASHER	W5-HH
12	GEAR (Z49/24)	4PP3522-3467P1
13	E-RING	RE3-SUS
14	GEAR (Z64)	4PP3522-3468P1
15	SCAN CLUTCH SPRING	4PP3522-3492P1
16	GEAR (Z38/19)	4PP3522-3471P1
17	POLYESTER WASHER	STW-FT70(t=0.25mm
18	E-RING	RE5-SUS
19	GEAR (Z61/25)	4PP3522-3480P1
20	GEAR (Z45/35)	4PP3522-3477P1
21	PRINT CLUTCH SPRING	4PP3522-3492P2
22	GEAR (Z18)	4PP3522-3478P1

ZEICHNUNG 8 - POWER SUPPLY (FIGURE 8 - POWER SUPPLY)

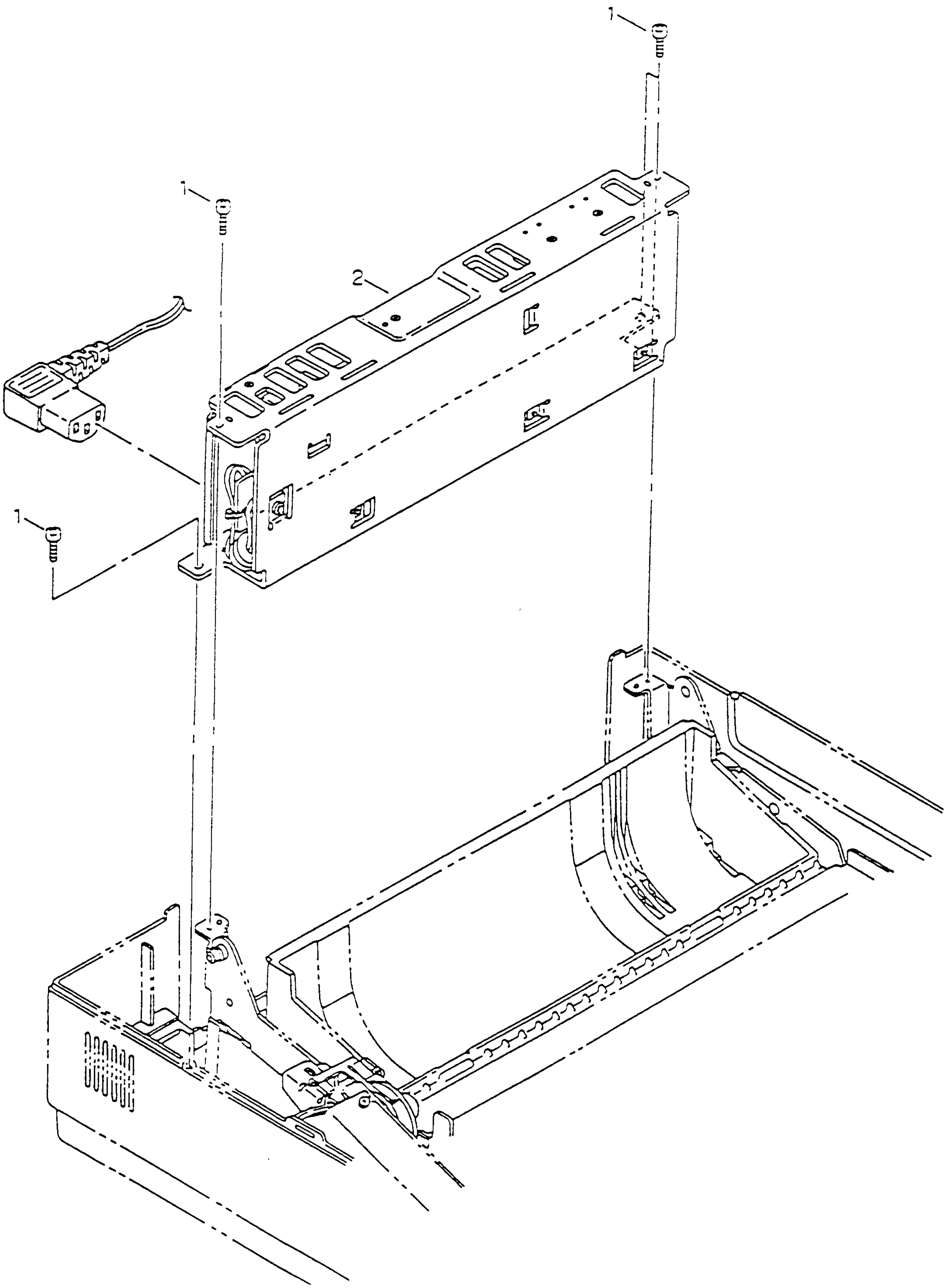

LISTE 8 - POWER SUPPLY (TABLE 8 - POWER SUPPLY)

NR. NO.	BEZEICHNUNG PART NAME	BESTELL-NR. PART NO
1	TAPPING SCREW	+BTD3-8-IOF
2	POWER SUPPLY UNIT	4YB3522-1211G3

ZEICHNUNG 9 - CABLES (FIGURE 9 - CABLES)

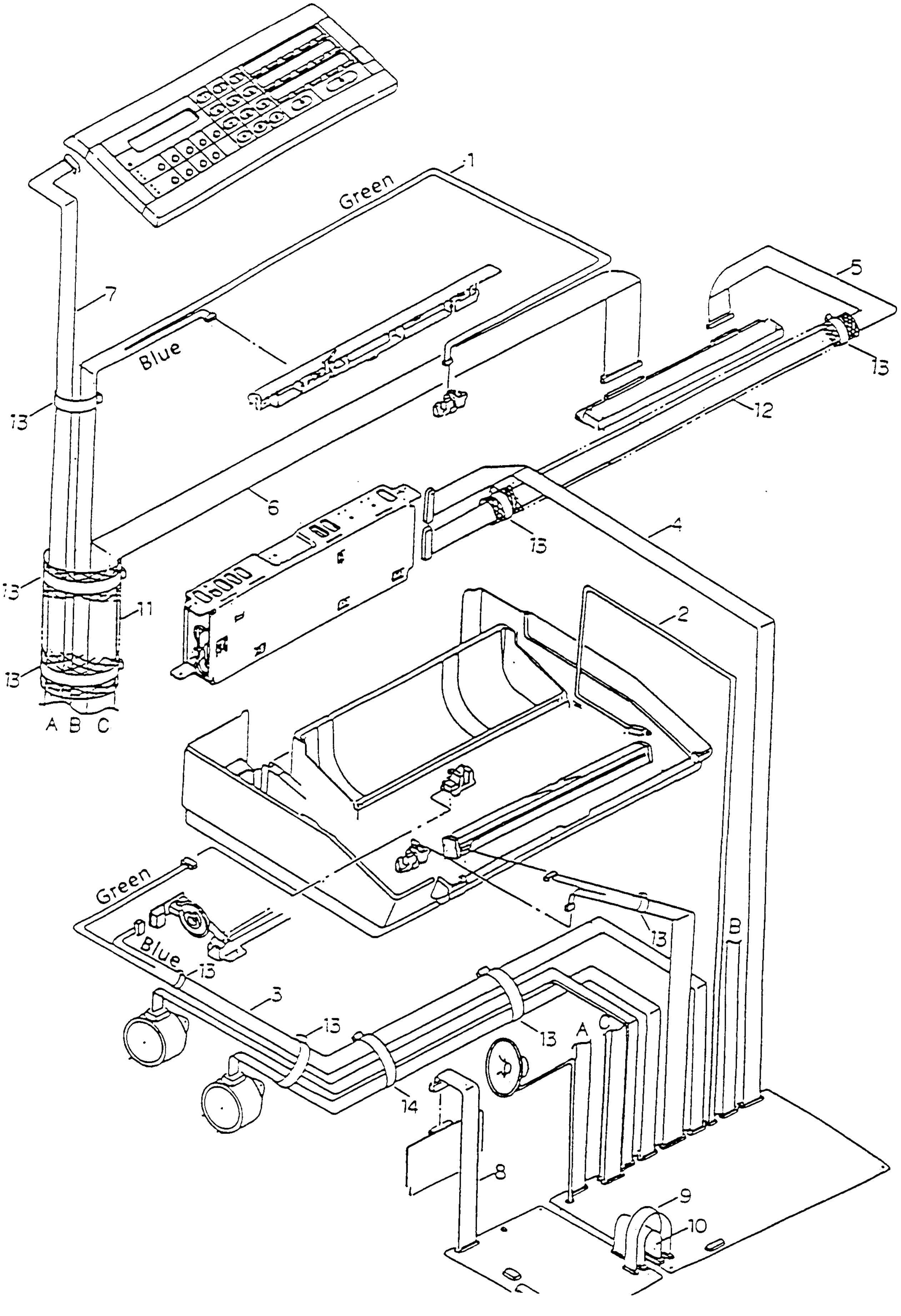

LISTE 9 - CABLES (TABLE 9 - CABLES)

NR. NO.	BEZEICHNUNG PART NAME	BESTELL-NR. PART NO
1	CABLE, PC1, 2-MCNT	4YS3522-1209G4
2	CABLE, DOOR OPEN	4YS3522-1210G2
3	CABLE, NESE-MCNT	4YS3522-1209G2
4	CABLE, PWU-MCNT	4YS3522-1208G2
5	CABLE, PWU-HEAD	4YS3522-1208G9
6	CABLE, HEAD-MCNT	4YS3522-1209G1
7	CABLE, OPE-MCNT	4YS3522-1208G1
8	CABLE, NCU-LINE	4YS3522-1208G8
9	CABLE, MCNT-NCU (2P)	4YS3522-1208G7
10	CABLE, MCNT-NCU (15P)	4YS3522-1208G5
11	NET TUBE	4PP3522-3683P1
12	NET TUBE	4PP3522-3683P2
13	NYLONE CLAMPER	123A1002P0001
14	NYLONE CLAMPER	123A1002P0002